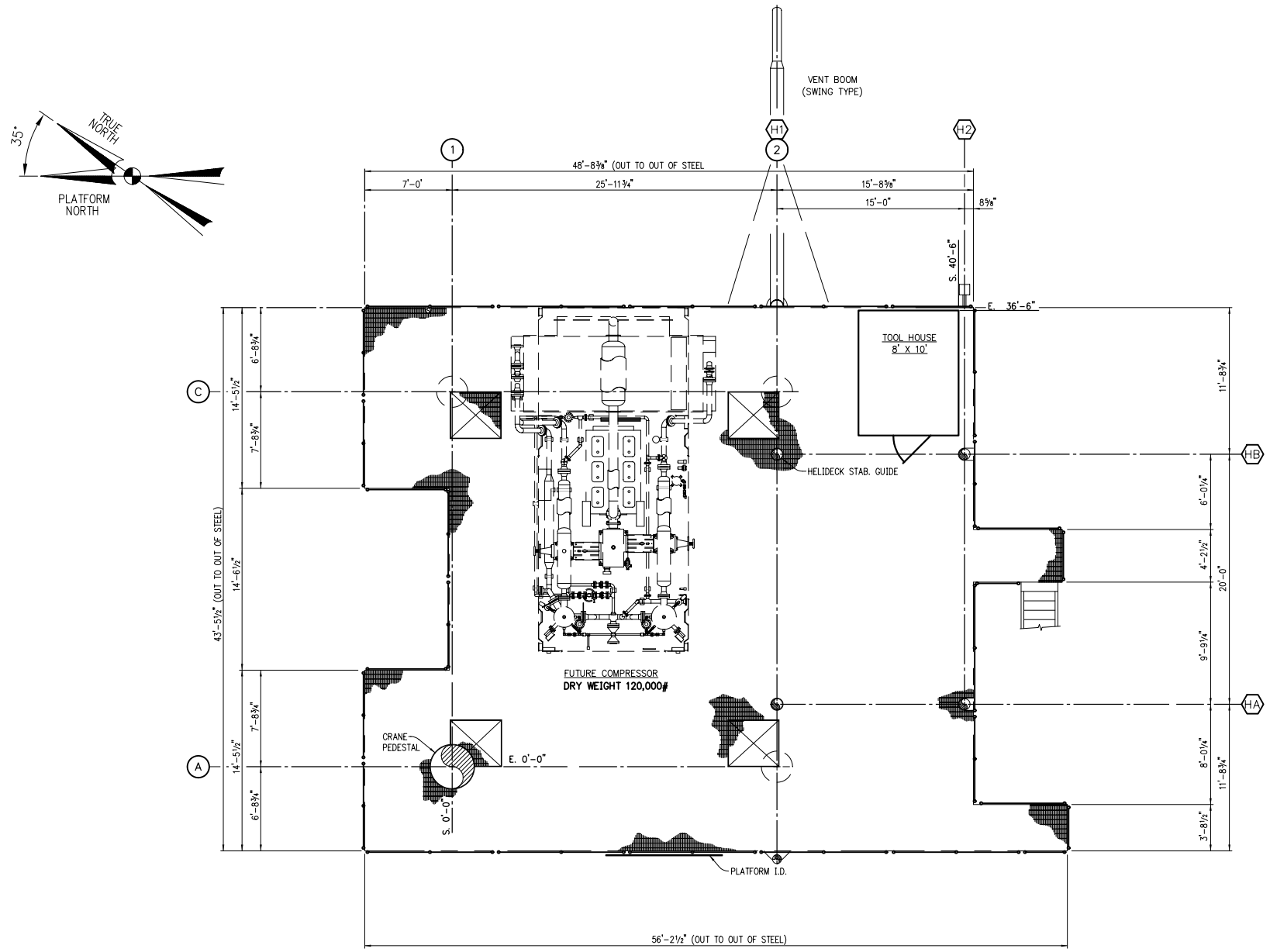

MAIN DECK

NOTES:

REVISIONS	NO.	DESCRIPTION	DATE

REVISIONS	NO.	DESCRIPTION	DATE
	0	ISSUED FOR CONSTRUCTION	8/31/01

OFFSHORE SPECIALTY FABRICATORS, INC.

OSFI SPEC DECK MID SIZE DECK

__ MMSCFD PRODUCTION PLATFORM

LOCATION BLOCK ___

EQUIPMENT LAYOUT – MAIN DECK

DRAWN BY	CHECKED BY	DATE	DRAWING NO.	
NES			500	
PROJECT ENGINEER	APPROVED BY	SCALE	SHEET NO.	REV.
		3/16"=1'-0"	1	0

PLOT DATE 08/31/01

AutoCAD FILE NAME

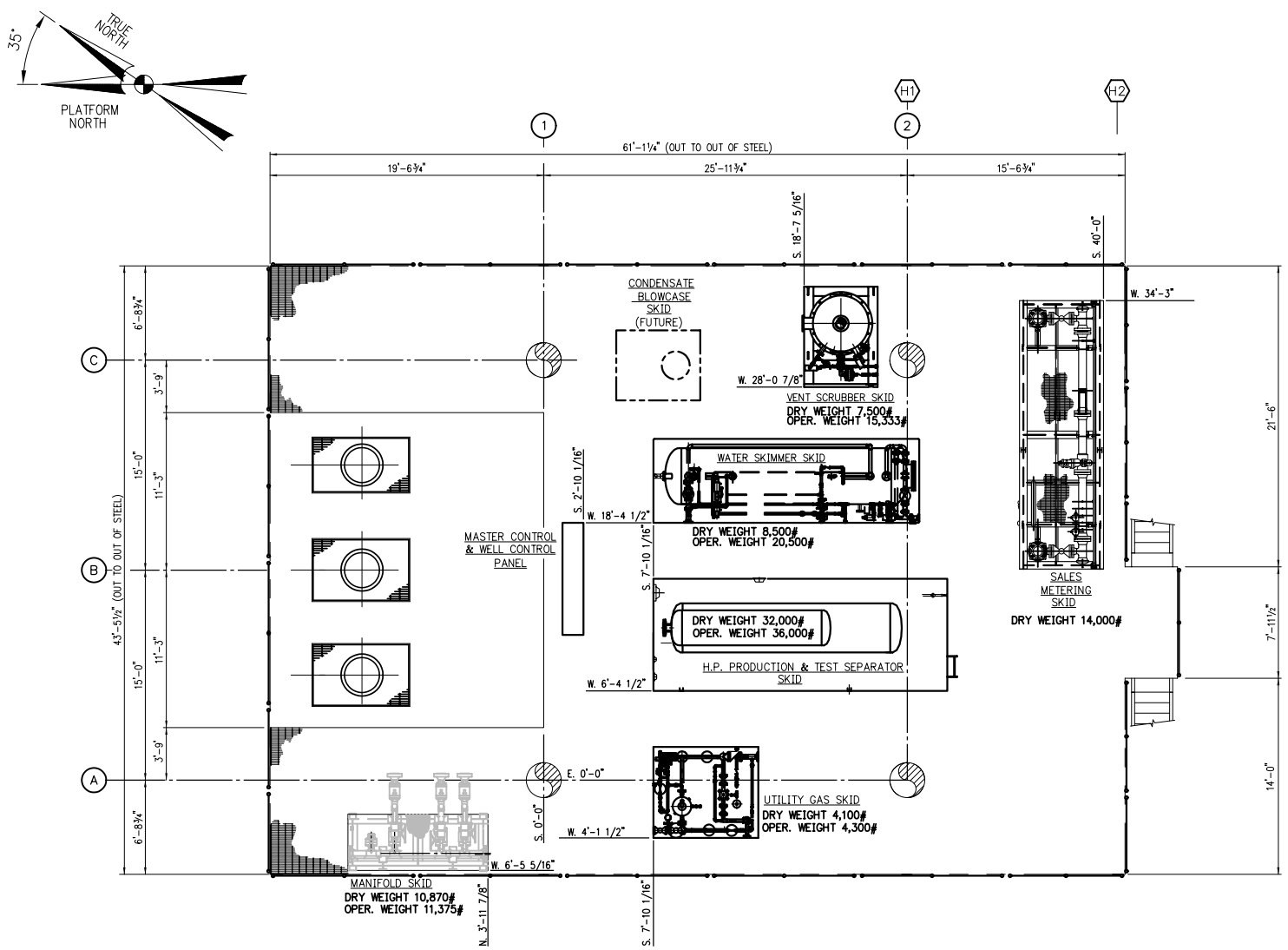

CELLAR DECK

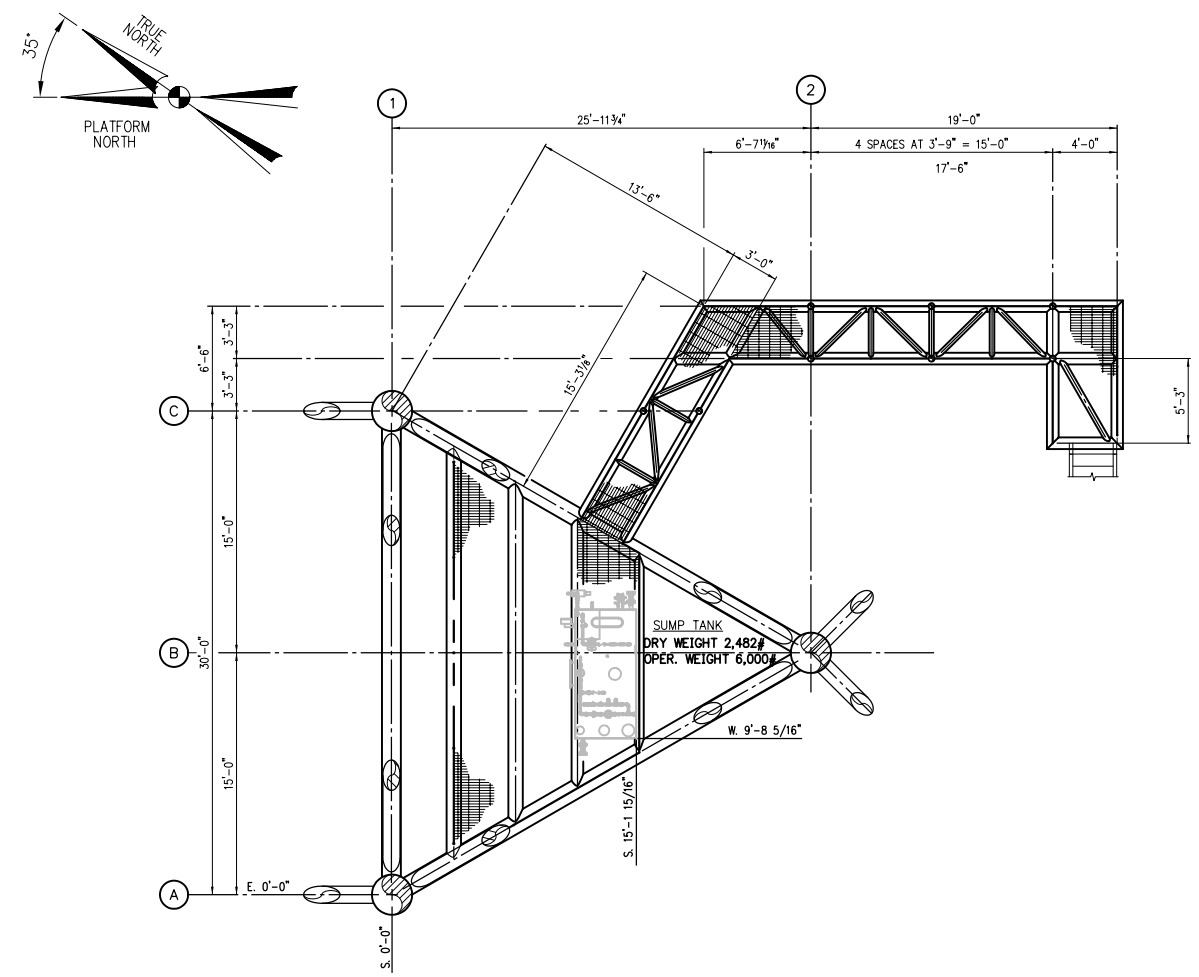

SUMP DECK

NOTES:

REVISIONS	NO.	DESCRIPTION	DATE

REVISIONS	NO.	DESCRIPTION	DATE
	0	ISSUED FOR CONSTRUCTION	8/31/01

OFFSHORE SPECIALTY FABRICATORS, INC.

OSFI SPEC DECK MID SIZE DECK

__ MMSCFD PRODUCTION PLATFORM

LOCATION BLOCK ___

EQUIPMENT LAYOUT–CELLAR DECK & SUMP DECK

DRAWN BY	CHECKED BY	DATE	DRAWING NO.
NES			501
PROJECT ENGINEER	APPROVED BY	SCALE 3/16"=1'-0"	SHEET NO. 1 / REV. 0

PLOT DATE 08/31/01

AutoCAD FILE NAME